USER'S MANUAL

PH232T485Y12

#1 to #2 RS-485/422 ISOLATED HUB

IPEX

(IP Electronix)

27 April 2024

Doc No: PH232T485Y12-UM-

CONTENTS

1. INTRODUCTION

IPEX PH232T485Y12 is a Bi-Directional RS-232 to 4 RS-485/RS-422 HUB that provides #2 RS-485/RS-422 ports from one single RS-232 port that converts RxD & TxD signals of RS-232 standard to differential (Data+ & Data-) signals of RS-485 standard and (RX+, RX- & TX+, TX-) signals of RS-422 standard at a same time. It works with Baud-Rate from 1200bps to 230400bps. Using this device, you can connect a RS-232 line, to 2 different devices which have RS-485 or RS-422 ports.

Since RS-485 is a Half-Duplex standard, switching between Transmit and Receive is done automatically and further signals (such as RTS) are not required. **PH232T485Y12** supports Point-to-Point and Point-to-Multi Point Party Line network topologies.

There are 3kV Optical and Electrical insulations have between RS-232 and RS-485/422 sides, thus using this device in the RS-485/RS-422 line, can be very effective in eliminating electrically and electromagnetically noises.

Protection against Surge, ESD and EMI is considered in its design, so, **PH232T485Y12** is good for industrial usage and is useful for Industrial Automation, Telecommunications, SCADA Systems, DCS Systems and …

This Device has two side:

Left Side **Right Side**

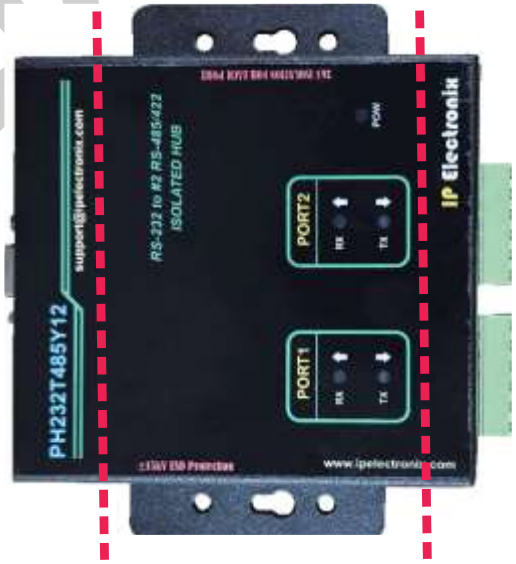

2. SPECIFICATIONS

- **RS-232** to #2 **RS-485/422** Bi-Directional Isolated HUB;
- **Number of Ports:** #1 RS-232 to #2 RS-485/422 Bi-Directional Repeater;
- **Serial Standard:** Meets or Exceeds the Requirements of TIA/EIA-232-F and ITU v.28 Standards;
- **RS-232 Signal (Full Flow Control Support):** TxD, RxD, DTR, RTS, DSR, CTS, GND;
- **RS-232 Parity:** Even, Odd, None, Mark and Space;
- **Serial Standard:** Meets or Exceeds the Requirements of RS-485/422 Standards;
- **RS-485 Signal:** Data+, Data-, GND;
- **RS-422 Signal:** TX+, TX-, RX+, RX-, GND;
- **RS-485/422 Parity:** Even, Odd, None, Mark and Space;
- **Maximum Communication Distance:** 2400m (1200m each side);
- **Loading:** RS-485 and RS-422 Side up to 32 Nodes are supported;
- Fully **Plug & Play;**
- **Wide Range Power Supply:** +9V to +48V DC;
- **Serial Transmission Speed** up to 230.4 kbps;
- **Power (Green)** LED Indicator;
- **Transmit (Blue)** and **Receive (Yellow)** LED Indicator;
- **Isolation Protection:** 3kV Instantaneous, 500V DC Continuous;
- **Surge Protection:** Embedded 1500W Surge Protection;
- **Magnetic Isolation:** 1.5 kV Built-in;
- **ESD Protection:** Exceeds ±15 kV Using Human-Body Model (HBM);
- **Dimensions:** 145mm x 118mm x 27mm (5.70in x 4.65in x 1.06in);
- **Operating Temperature:** -10°C to +70°C (+14°F to +158°F);
- **1 Year Guarantee** and **5 Years Support.**

3. PACKAGE CHECKLIST

Before installing the PH232T485Y12, verify that the package contains the following items:

1) #1 PH232T485Y12

2) #2 Din Rail Brackets with the corresponding screws

3) #1 Document and Driver CD-ROM

4) #1 220V AC to 12V DC Adaptor

NOTE: Notify your sales representative if any of the above items is missing or damaged.

4. TOP VIEW

5. BOTTOM VIEW

6. FRONT VIEW

7. BACK VIEW

8. PORT SETTINGS

To change the device settings, do the following steps:

1- Connect RS-232 Port to PC by means of a standard RS-232 Male-to-Female Cable
2- Run "Hyper Terminal" Software with settings "115200, 8, N, 1"
3- Start the device and press 'S' to enter settings console page

Note: Console parameters are always "115200, 8, N, 1" and are fixed, even when you have changed the device settings.

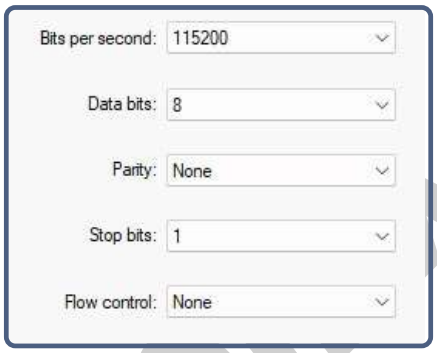

Hyper-Terminal Settings

After turning on the device; press "S" to change the device settings

```
        << PH232T485Y12 is Starting >>

 Console Settings are: "115200,8,n,1" (Not Changeable)

 Left-Side Operating Settings are: "115200,8,None,2"
Right-Side Operating Settings are: "19200,8,None,1"

 Press <S> to Change Operating Settings
```

Main Menu

```
        PH232T485Y12 Main Menu

1) Port Settings
2) Start Up Melody: OFF
3) Device Tests
4) Factory Reset

Press:
  <1:4> to Select an Item
  < S > to Save and Exit
  < E > to Exit without Saving

Enter your choice here:
```

Main Menu

Press:

- "1" for change Port settings;
- "2" for change Melody settings;
- "3" for Device tests;
- "4" for Factory Reset the device;
- "S" to save the settings;
- "E" to Exit

Port Settings Menu

```
        Port Settings

1) Left -Side Baud Rate    (bps): 115200
2) Right-Side Baud Rate    (bps): 19200
3) Left -Side Data Length (bits): 8
4) Right-Side Data Length (bits): 8
5) Left -Side Parity            : None
6) Right-Side Parity            : None
7) Left -Side Stop Bits   (bits): 2
8) Right-Side Stop Bits   (bits): 1

Press:
  <1:8> to Select an Item
  < M > to Back to the Main Menu

Enter your choice here:
```

In this section you can change the settings for both Left-Side (RS-232) and Right-Side (RS-485/RS-422).

Press:

- "1" and "2" for change Baud-Rate (between 1200 to 230400 bps);
- "3" and "4" for change Data-Length (5, 6,7, 8, 9 bits);
- "5" and "6" for change Parity (None, Odd, Even, Mark, Space);
- "7" and "8" for change Stop-Bits (1, 1.5, 2 bits);
- "M" to Back to the main menu;

After changing the device settings, back to the main menu and save new settings.

Notice: In a normal operating, RS-232 and RS-485/422 side's settings MUST be the same, however you can set them separately, if you want for example change the Baud-Rate …

9. RS-232 SERIAL PORT PIN CONFIGURATION

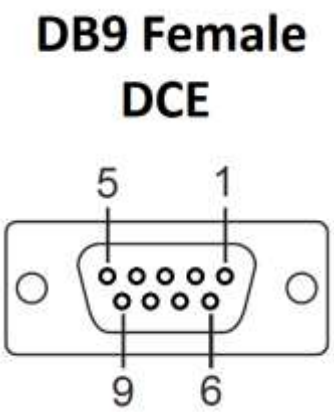

PIN	NAME	TYPE
1	DCD	OUTPUT
2	RxD	OUTPUT
3	TxD	INPUT
4	DTR	INPUT
5	GND	GROUND
6	DSR	OUTPUT
7	RTS	INPUT
8	CTS	OUTPUT
9	RI	OUTPUT

Data Communication Equipment (DCE)

10. RS-485/RS-422 SERIAL PORT PIN CONFIGURATION

PIN	NAME	TYPE
1	—	—
2	—	—
3	Data+	IN/OUT
4	Data-	IN/OUT
5	GNDi	ISOLATED GROUND
6	GNDi	ISOLATED GROUND

RS-485

PIN	NAME	TYPE
1	RxD+	INPUT
2	RxD-	INPUT
3	TxD+	OUTPUT
4	TxD-	OUTPUT
5	GNDi	ISOLATED GROUND
6	GNDi	ISOLATED GROUND

RS-422

11. PH232T485Y12 CONNECTION DIAGRAM

- **PH232T485Y12 in RS-485 Mode**

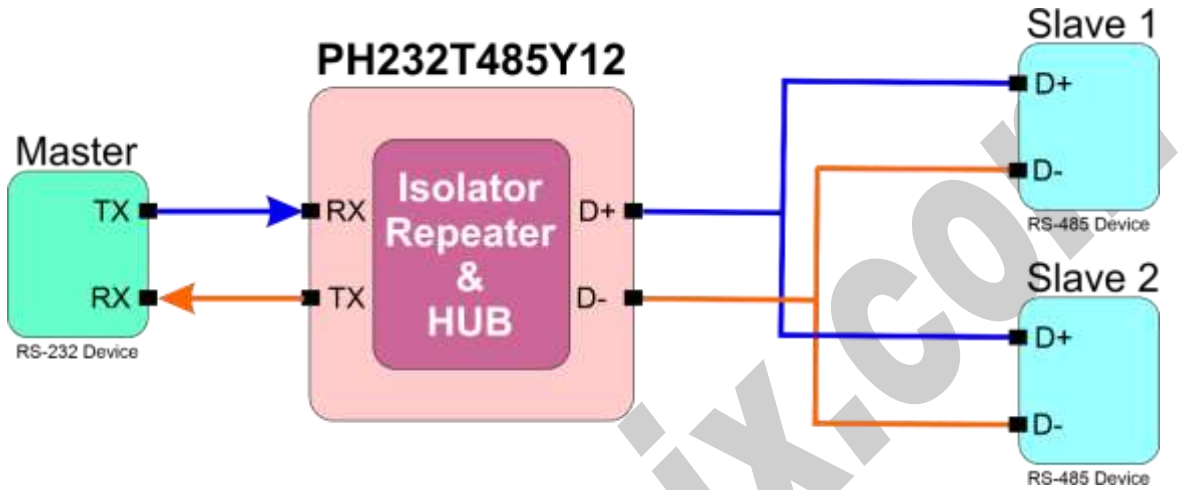

- **PH232T485Y12 in RS-422 Mode**

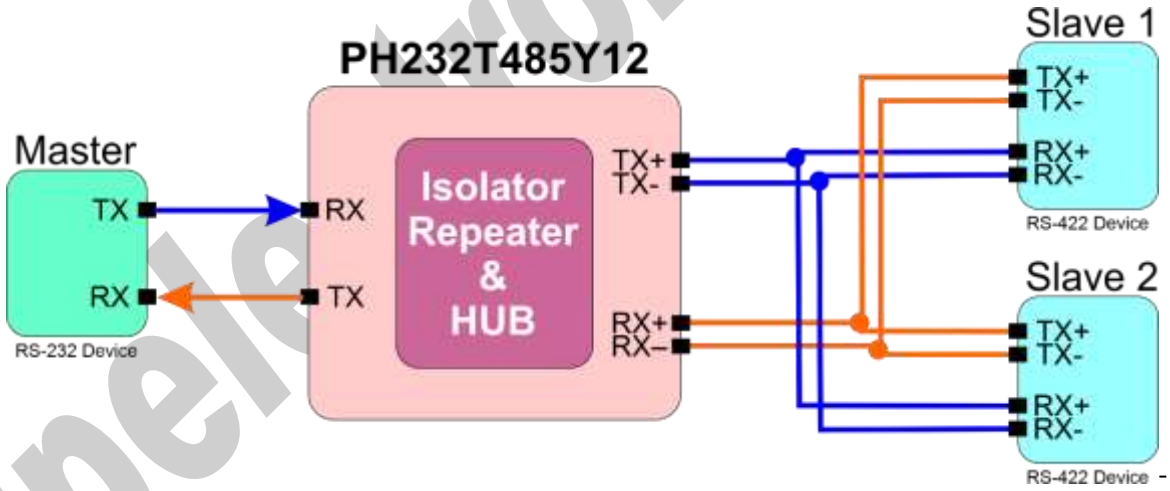

- **PH232T485Y12 in Mixed Mode**

It is possible to use PH232T485Y12 in mixed mode, this means you can use each port as RS-485 or RS-232 separately.

12. RS-232 CONNECTING METHODS

- Modem Connection (to a Modem, any DCE devices)

DTE DB9-Male Pin Number		Modem or other DCE devices DB9-Female Pin Number	
Pin 1: DCD	(Input)	Pin 1: DCD	(Output)
Pin 2: RxD	(Input)	Pin 2: RxD	(Output)
Pin 3: TxD	(Output)	Pin 3: TxD	(Input)
Pin 4: DTR	(Output)	Pin 4: DTR	(Input)
Pin 5: GND	(Ground)	Pin 5: GND	(Ground)
Pin 6: DSR	(Input)	Pin 6: DSR	(Output)
Pin 7: RTS	(Output)	Pin 7: RTS	(Input)
Pin 8: CTS	(Input)	Pin 8: CTS	(Output)
Pin 9: RI	(Input)	Pin 9: RI	(Output)

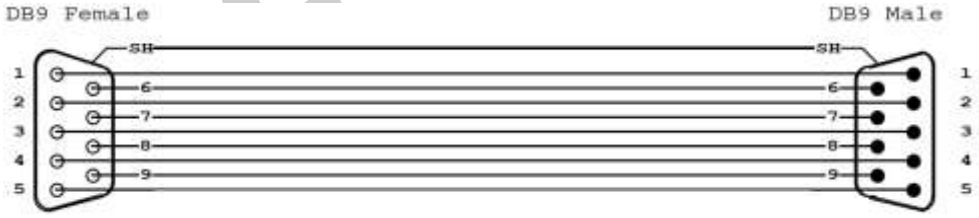

(Modem Cable)

- Null Modem Connection (to PC, PLC, RTU or any other DTE devices)

DTE DB9-Male Pin Number		PC, PLC or other DTE devices DB9-Male Pin Number	
Pin 1: DCD	(Input)	Pin 7: RTS	(Output)
Pin 2: RxD	(Input)	Pin 3: TxD	(Output)
Pin 3: TxD	(Output)	Pin 2: RxD	(Input)
Pin 4: DTR	(Output)	Pin 6: DSR	(Input)
Pin 5: GND	(Ground)	Pin 5: GND	(Ground)
Pin 6: DSR	(Input)	Pin 4: DTR	(Output)
Pin 7: RTS	(Output)	Pin 8: CTS	(Input)
Pin 8: CTS	(Input)	Pin 7: RTS	(Output)
Pin 7: RTS	(Output)	Pin 1: DCD	(Input)

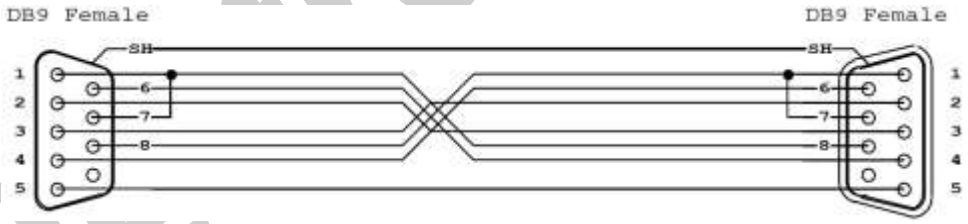

(Null Modem Cable)

- Simple Null Modem Connection (to PC, PLC… Without Hardware Flow control)

DTE DB9-Male Pin Number	PC, PLC or other DTE devices DB9-Male Pin Number
Pin 2: RxD (Input)	Pin 3: TxD (Output)
Pin 3: TxD (Output)	Pin 2: RxD (Input)
Pin 5: GND (Ground)	Pin 5: GND (Ground)

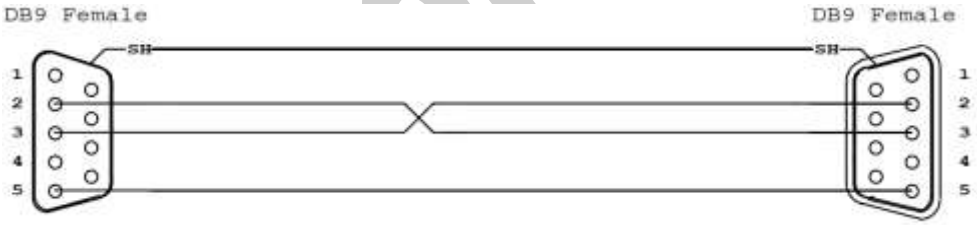

(Simple Null Modem Cable (Without Hardware Handshaking))

13. RS-485 CONNECTING METHODS

- **RS-485: Point to Point Connection**

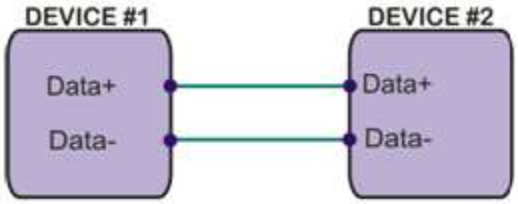

- **RS-485: Multipoint Network**

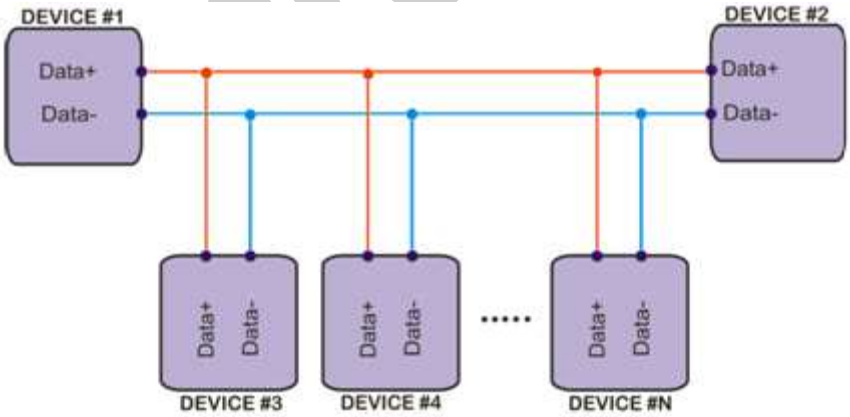

14. RS-422 CONNECTING METHODS

- **RS-422: Point to Point**

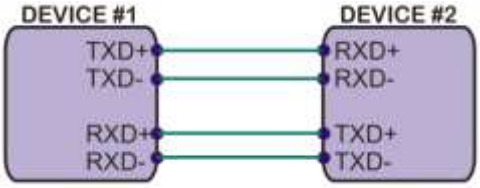

- **RS-422: Multi-Drop Network**

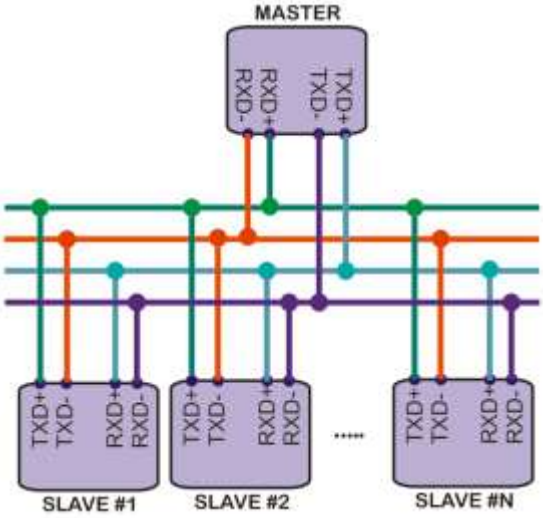

15. GUARANTEE

All products manufactured by **IPEX** are under warranty regarding defective materials for a period of one year from the date of delivery to the original purchaser.

16. TECHNICAL SUPPORT

If you have any technical question or need any technical support, please contact us using this Email address: support@ipelectronix.com.